Rev.	date	Description revision
A		

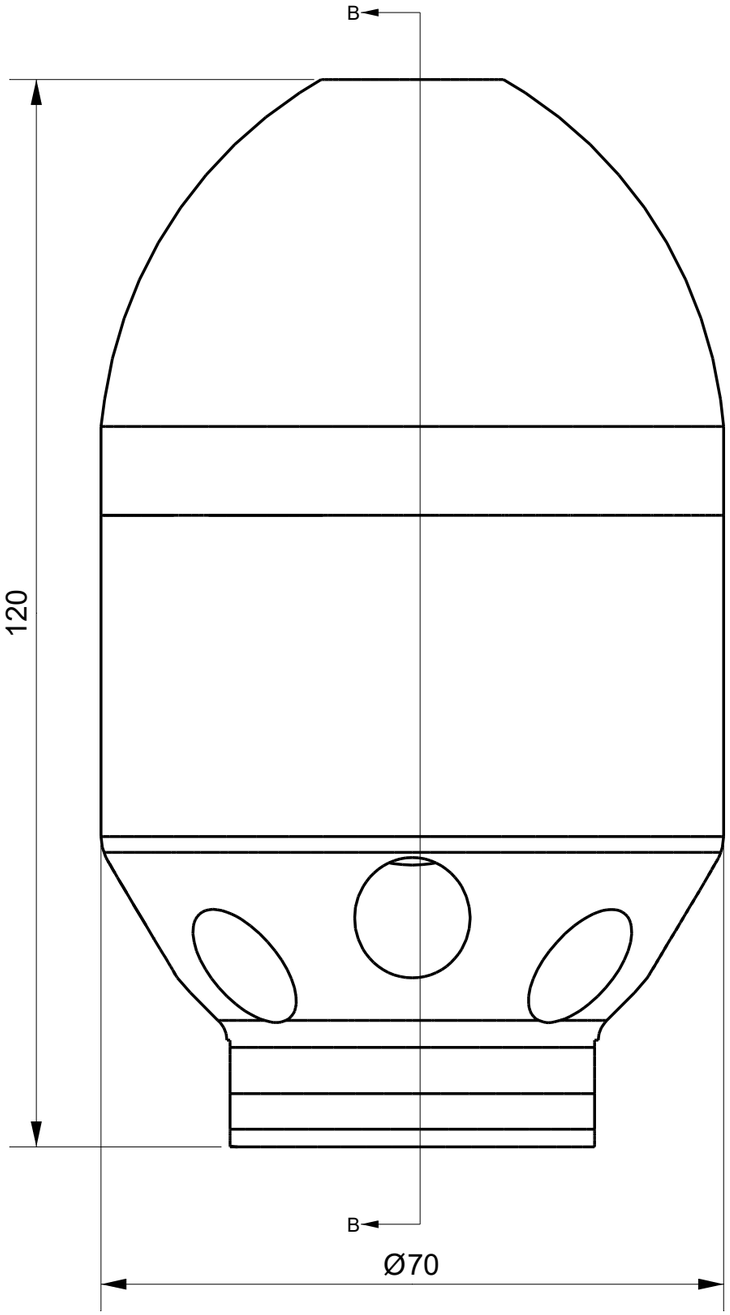

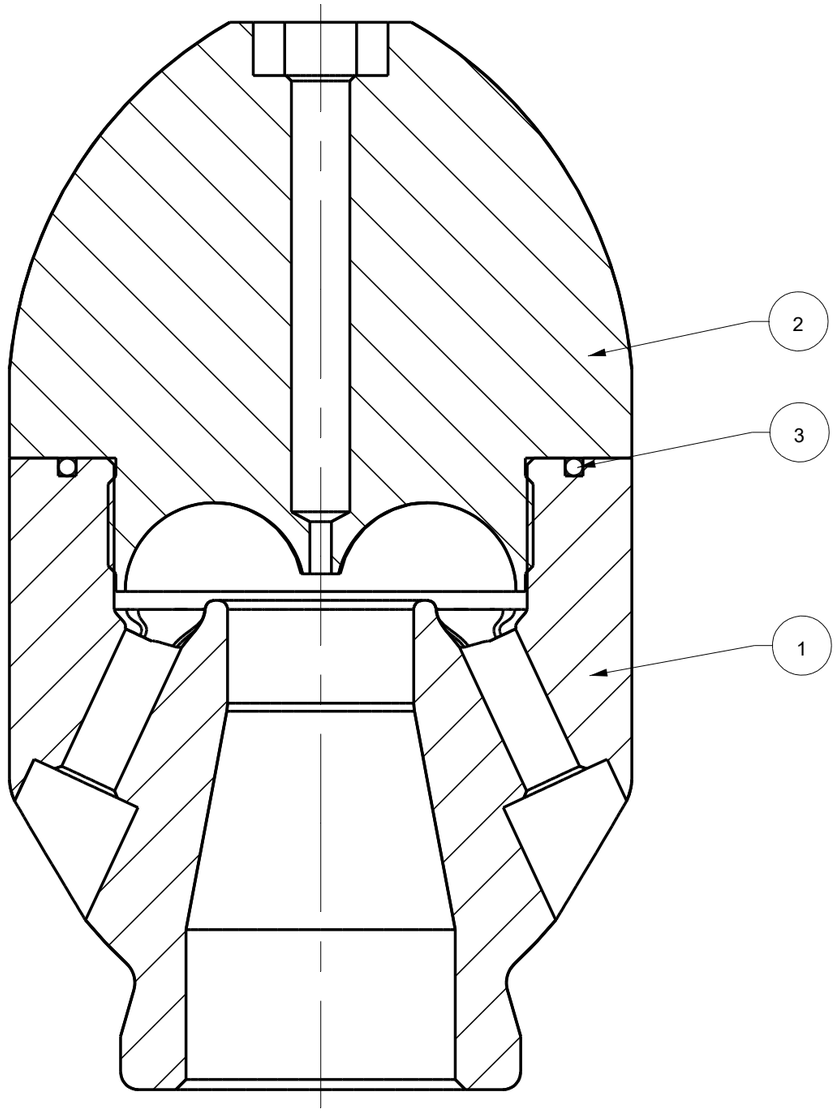

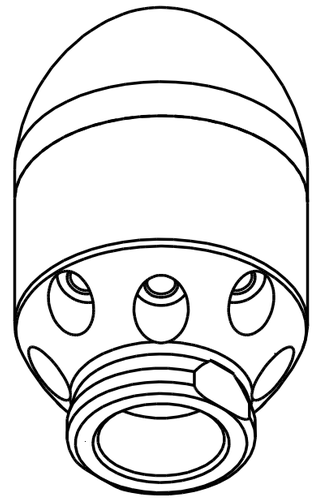

Section B-B

3	1	O-ring			
2	1	Weight Part		1060-S1	
1	1	Inlet Part		1060-S2	

Tolerances	Finish						Material
Unless Otherwise Specified ACC. DIN-ISO 2768 -1and 2 Angular +/- 0,3° Corners <0,2x45° / R<0,2	Dimension (No Decimals)	0 t/m 6	6 t/m 30	30 t/m 120	120 t/m 400	400 t/m 1000	--
	Tolerance	0,1	0,2	0,3	0,5	0,8	

	Name	Date	Remarks	Description
Drawn		13-3-2024		Cleaning 3D Nozzle 1"
Checked				
Projection		Drawing remains the property of Salomon Jetting Parts B.V.	Unit: mm / Number	Project

Salomon Jetting Parts B.V.
Reedijk 8-1
3274 KE Heinenoord
www.sjpbv.com
info@sjpbv.com
+31 (0) 88 126 1900

Size	Drawing nr.	Rev
A3	1060-S	A

Scale	CAD File	Sheet
1:1.5		1 of 1