Rev.A	date	Description revision

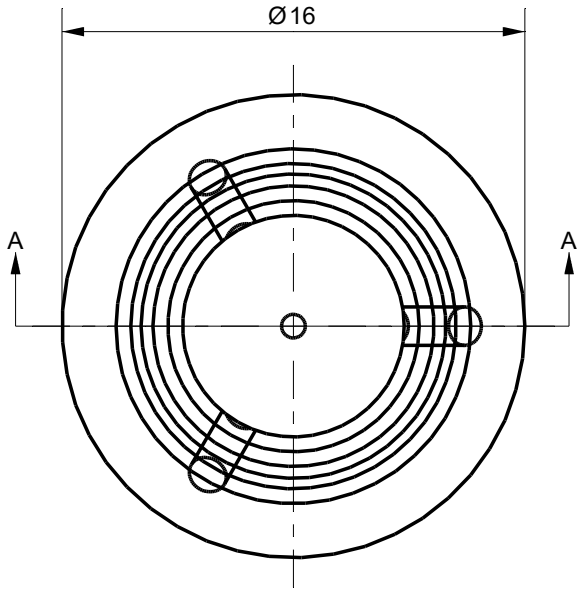

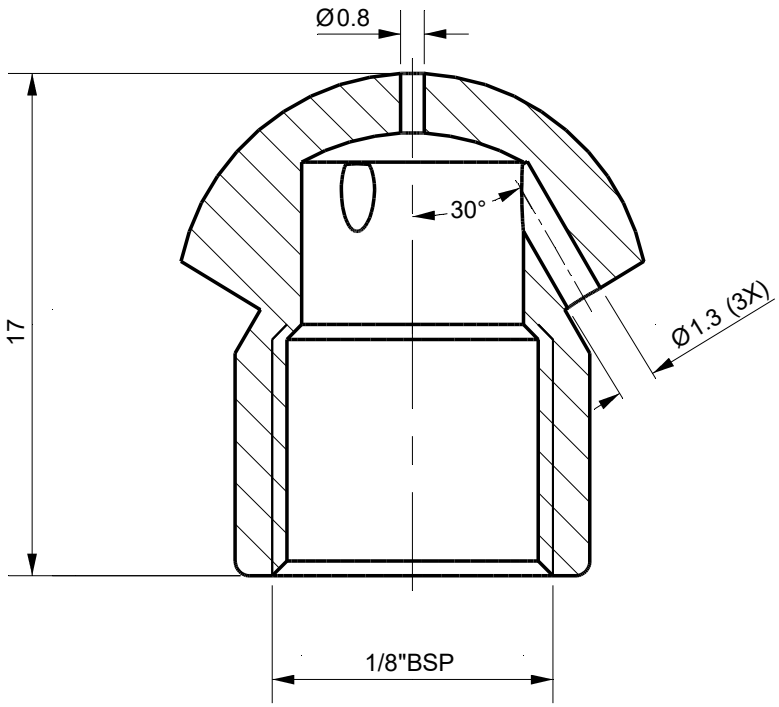

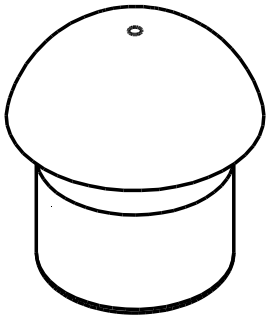

Section A-A

Tolerances	Finish	Material
Unless Otherwise Specified ACC. DIN-ISO 2768 -1and 2 Angular +/- 0,3° Corners <0,2x45° / R<0,2	--	St.St. 316

Dimension (No Decimals)	0 t/m 6	6 t/m 30	30 t/m 120	120 t/m 400	400 t/m 1000
Tolerance	0,1	0,2	0,3	0,5	0,8

	Name	Date	Remarks
Drawn		26-5-2021	
Checked			
Projection			

Drawing remains the property of Salomon Jetting Parts B.V.

Unit: mm

Number:

Description: Mini Mushroom Nozzle 1/8"BSP + Front

Project:

Salomon Jetting Parts B.V.
Reedijk 8-1
3274 KE Heinenoord
www.sjpbv.com
info@sjpbv.com
+31 (0) 88 126 1900

Size	Drawing nr.	Rev
A4	63-319-30	B

Scale	CAD File	Sheet
4:1		1 of 1