Rev.A	date	Description revision

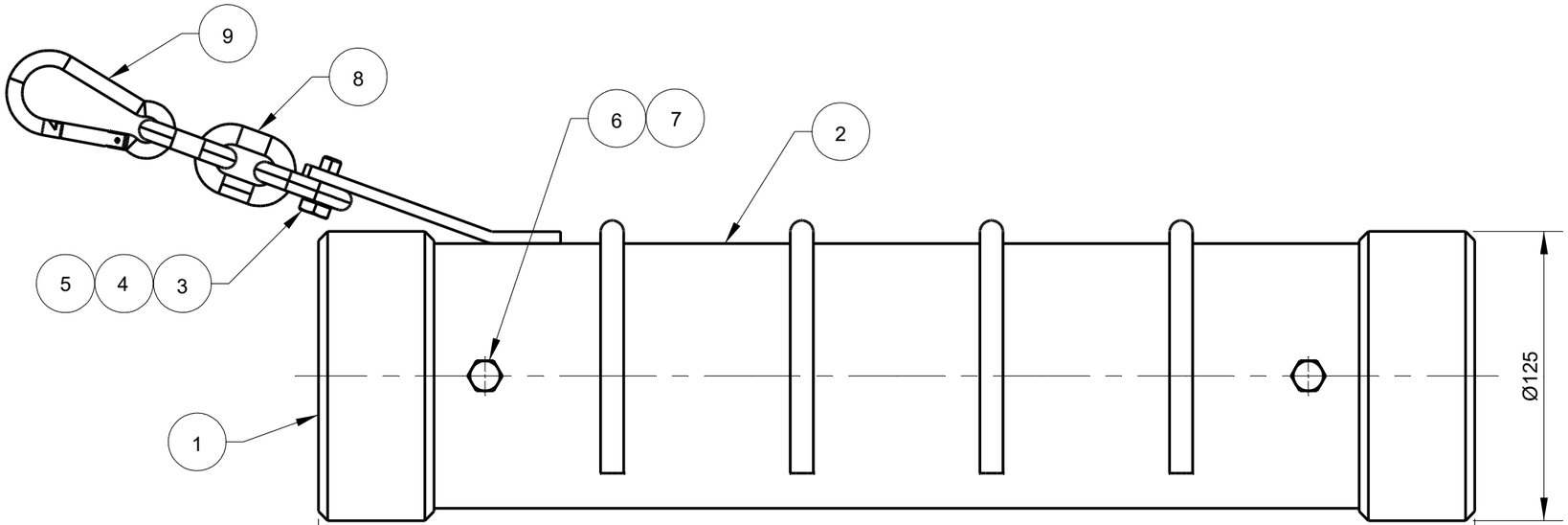

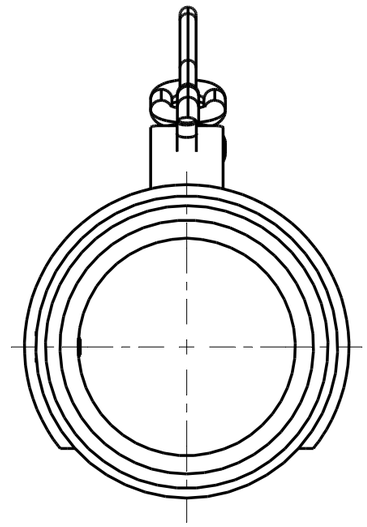

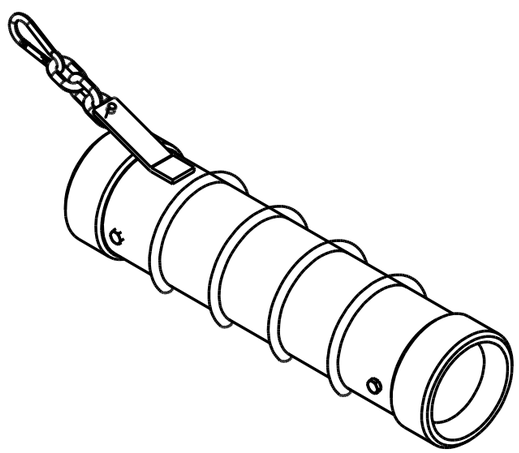

Pos.	Nr.	Description	Material		Part. Nr.
9	1	Carabiner Ø8 mm	St. St. 304		24518
8	1	Long-Link Chain Ø5mm +/- 7mtr.			1018650.700
7	2	Serrated Lock Washer M8	St. St. 304		6798A0A2008
6	2	Hex. Bolt M8 x 12	ISO 4017		933000A20080012
5	1	Self-locking Nut M8	**St. St. 304**		982000A2008
4	1	Ring Ø8.5 X Ø20 X1.5	St. St. 304		CARR20A20080000
3	1	Hex. Bolt M8 x 25	ISO 4017		933000A20080025
2	1	Hose Guide Welded parts Assy			841.100.0007-5
1	2	Wear Ring Hose Guide XL	Delrin		841.100.0007-4

Tolerances
Unless Otherwise Specified
ACC. DIN-ISO 2768 -1en 2
Angular +/- 0,3°
Corners <0,2x45° / R<0,2

Finish
--

Dimension (No Decimals)	0 t/m 6	6 t/m 30	30 t/m 120	120 t/m 400	400 t/m 1000
Tolerance	0,1	0,2	0,3	0,5	0,8

Material
--

	Name	Date
Drawn		
Checked		
Projection		

Remarks

Drawing remains the property of Salomon Jetting Parts B.V.

Unit: mm

Number:

Description
Hose Guide XL

Project

Salomon Jetting Parts B.V.
Reedijk 8-1
3274 KE Heinenoord
www.sjpbv.com
info@sjpbv.com
+31 (0) 88 126 1900

Size	Drawing nr.	Rev
A3	841.100.0007	A
Scale 1:2.5	CAD File	Sheet 1 of 1