SALOMON JETTING PARTS

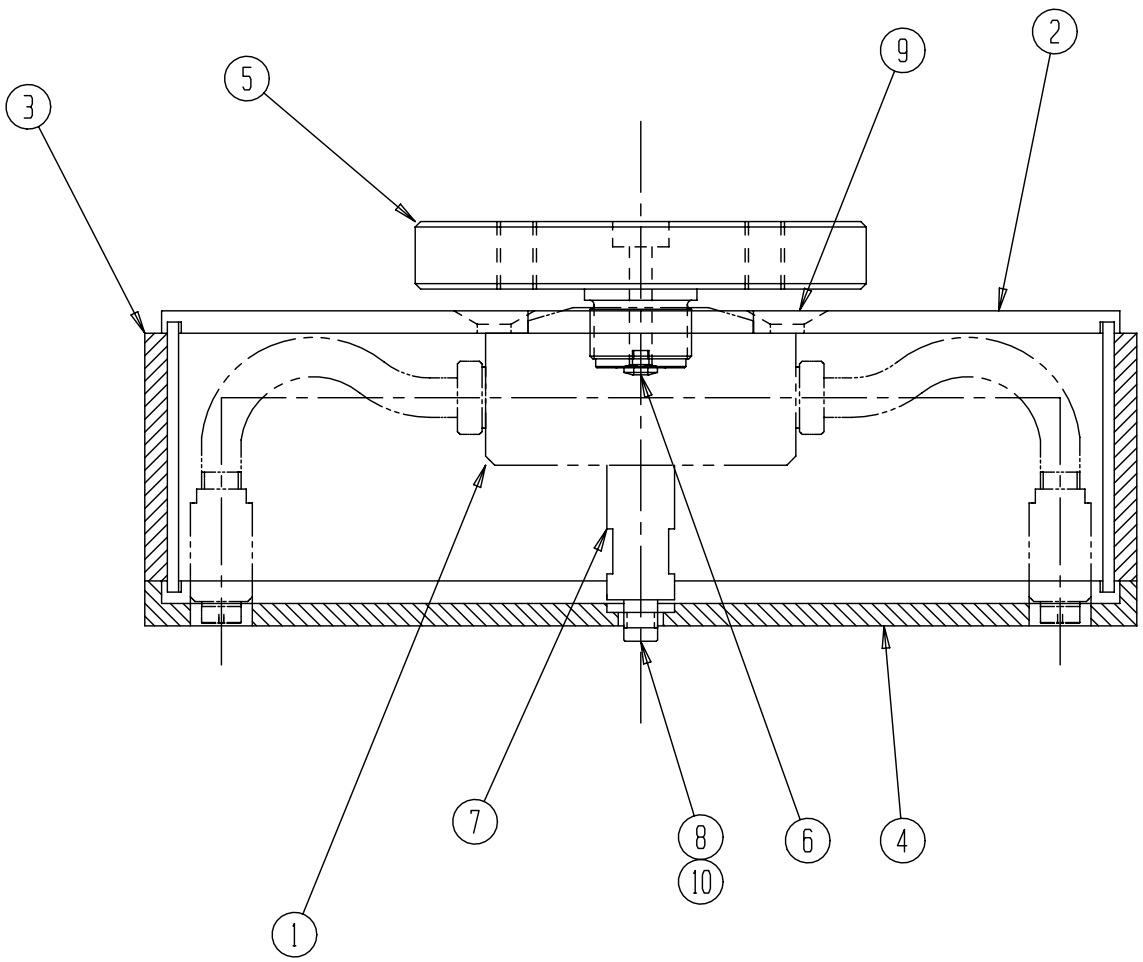

ITEM	PART NO	DESCRIPTION	QTY
1	3300	∅10" SPRAY BAR ASSY	1
2	3309	ENCLOSURE-TOP	1
3	3322	ENCLOSURE-SIDE COATED	1
4	3321	ENCLOSURE-BOTT COATED	1
5	3301	ADAPTER	1
6	3218	BUTTON SEAL	1
7	3312	∅10" STANDOFF	1
8	3323	STANDOFF WASHER	1
9		3/8-16 X 3/4 SS FLAT HD	2
10		3/8-16 X 3/4 SS HEX BOLT	1

UNLESS OTHERWISE SPECIFIED:
DIMENSIONS ARE IN INCHES TOLERANCES ON DIM SURFACE FINISH 63
2 PL DEC +/-.01 3PL DEC +/-.005 ANGLES +/-.5

REV.	ECO - DATE	MATERIAL: SEE DWG	SCALE	DRAWN/DESIGN	DATE	CHECKED/TOOLING	APPROV
				L HEWITT	7-25-95		

NAME: ∅10" SPRAY BAR FINAL ASSY

DWG. NO.: SK-780