SALOMON JETTING PARTS

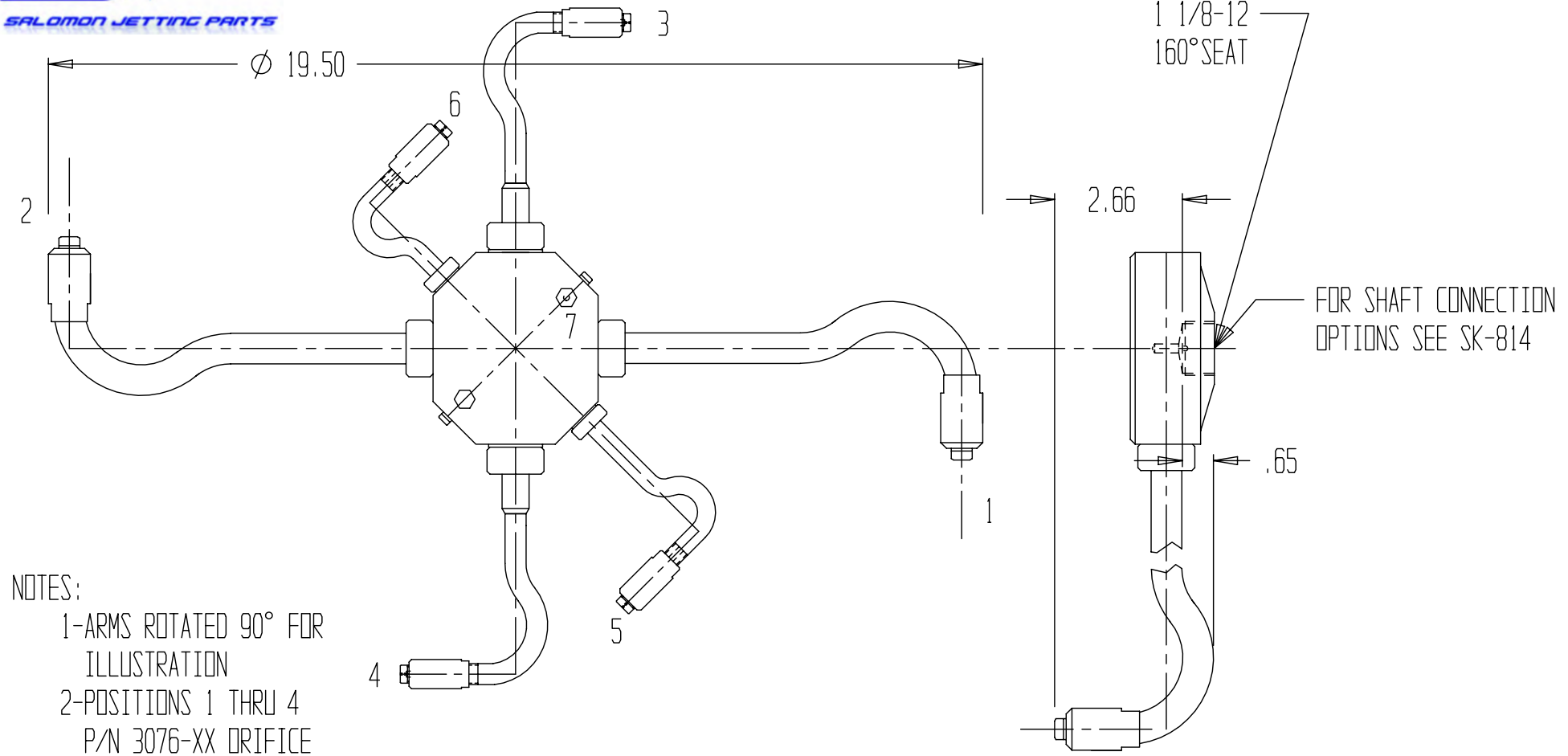

NOTES:

1-ARMS ROTATED 90° FOR ILLUSTRATION

2-POSITIONS 1 THRU 4 P/N 3076-XX ORIFICE ASSY OR P/N 3108 PLUG

3-POSITIONS 5 THRU 7 P/N 3024-XX ORIFICE ASSY OR 3045 PLUG

UNLESS OTHERWISE SPECIFIED:
DIMENSIONS ARE IN INCHES TOLERANCES ON DIM SURFACE FINISH 63
2 PL DEC +/-.01 3PL DEC +/-.005 ANGLES +/-.5

REV.	ECO - DATE
A	2-12-99
B	8-27-99
C	9-28-99
D	4-25-00
E	1-30-02

MATERIAL:	SCALE	DRAWN/DESIGN	DATE	CHECKED/TOOLING	APPROV
		L HEWITT	12-21-98		

NAME: Ø20" SPRAY BAR ASSY-P/N 3332

DWG. NO.: SK-781