SALOMON JETTING PARTS

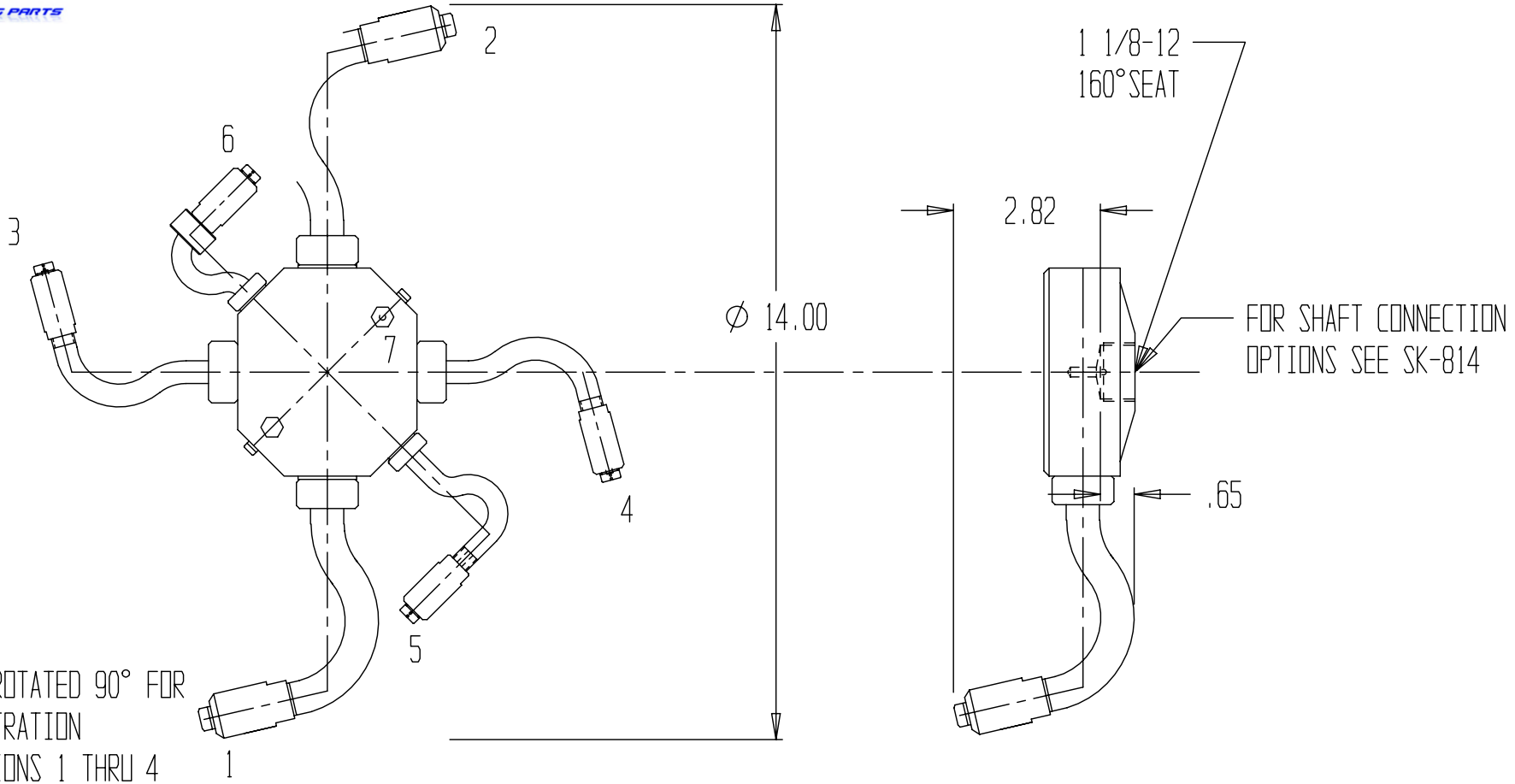

NOTES:

1-ARMS ROTATED 90° FOR ILLUSTRATION

2-POSITIONS 1 THRU 4
P/N 3076-XX ORIFICE
ASSY OR P/N 3108 PLUG

3-POSITIONS 5 THRU 7
P/N 3024-XX ORIFICE
ASSY OR 3045 PLUG

UNLESS OTHERWISE SPECIFIED:
DIMENSIONS ARE IN INCHES TOLERANCES ON DIM SURFACE FINISH 63
2 PL DEC +/-.01 3PL DEC +/-.005 ANGLES +/-.5

REV.	ECO - DATE
A	9-28-99
B	1-29-02

MATERIAL:	SCALE	DRAWN/DESIGN	DATE	CHECKED/TOOLING	APPROV
		L HEWITT	7-19-99		

NAME	DWG. NO.
∅14" SPRAY BAR ASSY-P/N 3385	SK-788