Rev.A	date	Description revision
Rev.B	11-3-2024	Canged finishing / engraving added
Rev.C	1-6-206	Dimensions added

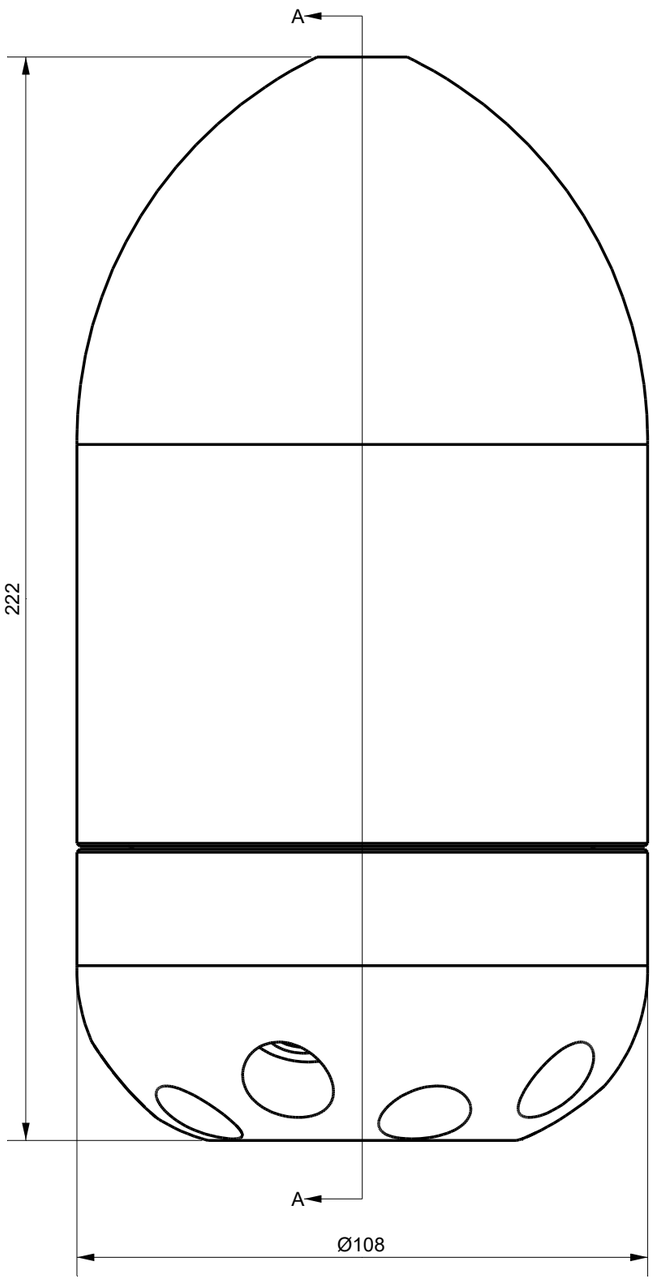

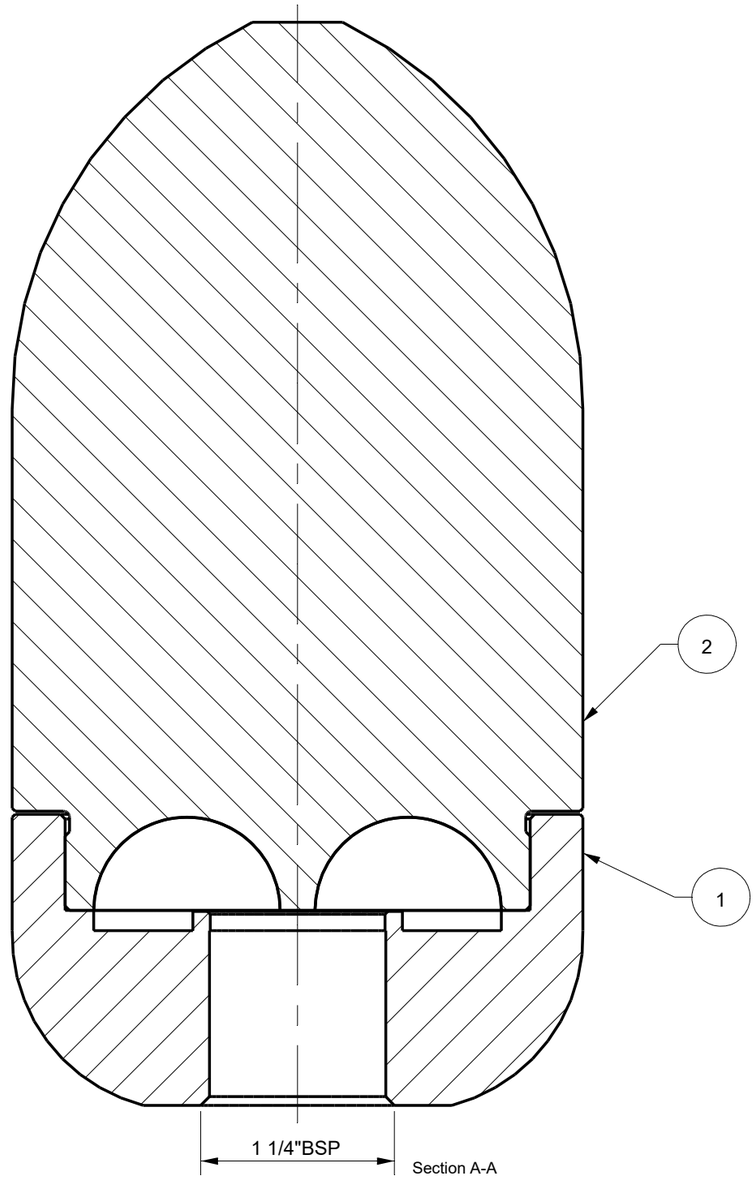

Section A-A

2	1	Weight Part		0302-S2	
1	1	Inlet Part		0302-S1	

Tolerances
Unless Otherwise Specified
ACC. DIN-ISO 2768 -1and 2
Angular +/- 0,3°
Corners <0,2x45° / R<0,2

Finish

Dimension (No Decimals)	0 t/m 6	6 t/m 30	30 t/m 120	120 t/m 400	400 t/m 1000
Tolerance	0,1	0,2	0,3	0,5	0,8

Material
--

	Name	Date	Remarks
Drawn		14-3-2022	
Checked			
Projection			

Drawing remains the property of Salomon Jetting Parts B.V.

Unit: mm

Number

Description
Classic Bomb 1 1/4"

Project

Salomon Jetting Parts B.V.
Industriestraat 17
3291 CC Strijen
www.sjpbv.com
info@sjpbv.com
+31 (0) 88 126 1900

Size	Drawing nr.	Rev
A3	0302-S	C
Scale 1:1	CAD File	Sheet 1 of 1