Rev	date	Description revision
Rev.A		

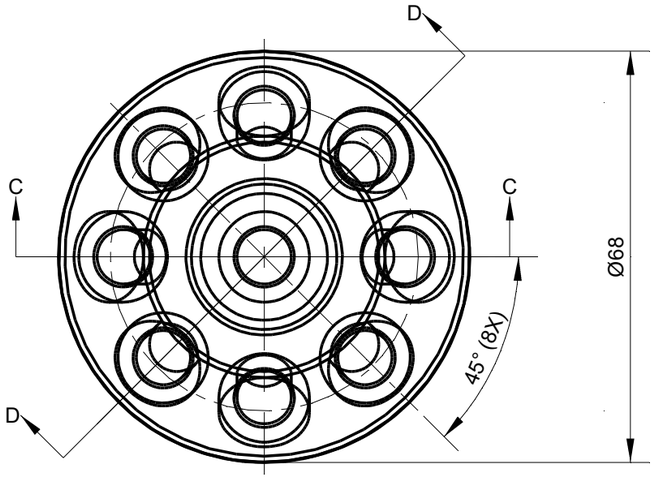

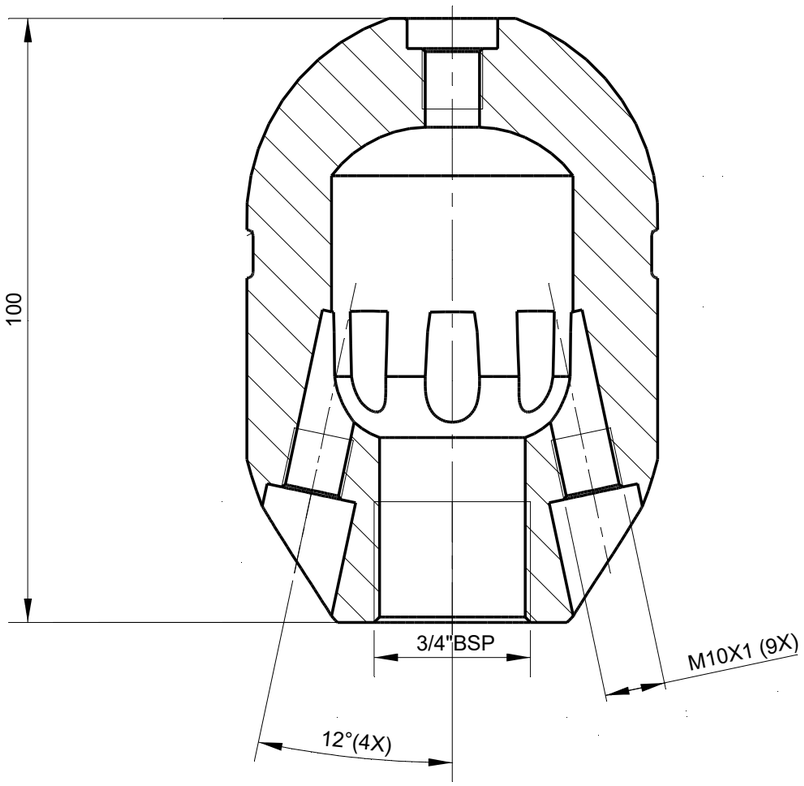

Section C-C

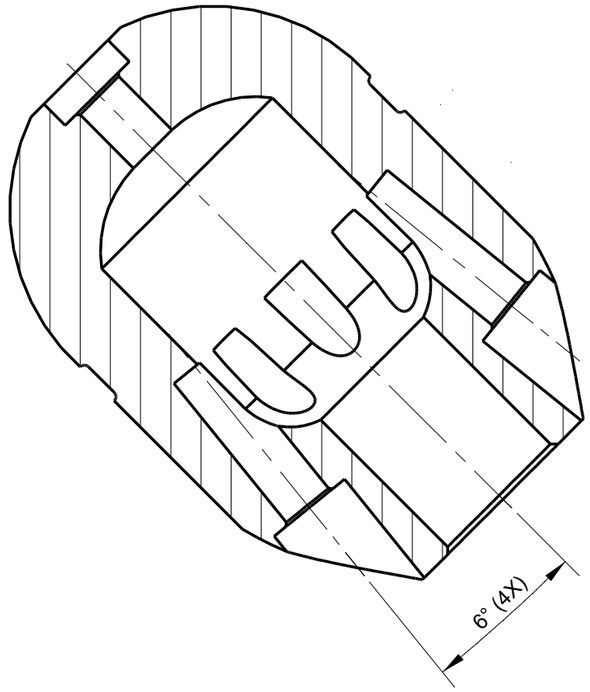

Section D-D

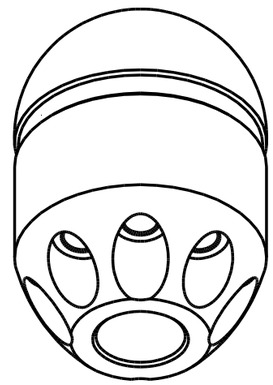

Tolerances Unless Otherwise Specified ACC. DIN-ISO 2768 -1en 2 Angular +/- 0,3° Corners <0,2x45° / R<0,2	**Finish**						**Material**
	Dimension (No Decimals)	**0 t/m 6**	**6 t/m 30**	**30 t/m 120**	**120 t/m 400**	**400 t/m 1000**	
	Tolerance	0,1	0,2	0,3	0,5	0,8	
	Name	**Date**	**Remarks**				**Description** Grenade Nozzle HW 70 3/4"BSPF
Drawn		3-7-2026					
Checked							
Projection			**Drawing remains the property of Salomon Jetting Parts B.V.**	**Unit** mm	**Number**		Project

Salomon Jetting Parts B.V.
Reedijk 8-1
3274 KE Heinenoord
www.sjpbv.com
info@sjpbv.com
+31 (0) 88 126 1900

Size	Drawing nr.	Rev
A3	50606	A
Scale 1:1	**CAD File**	**Sheet** 1 of 1