Rev.	date	Description revision
A		

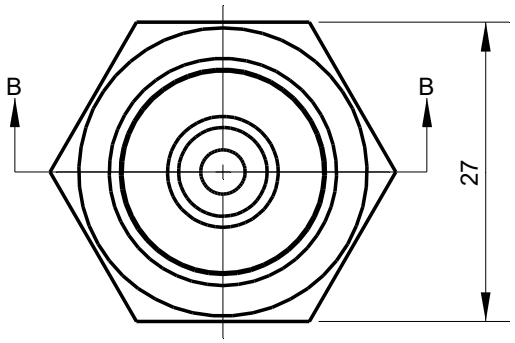

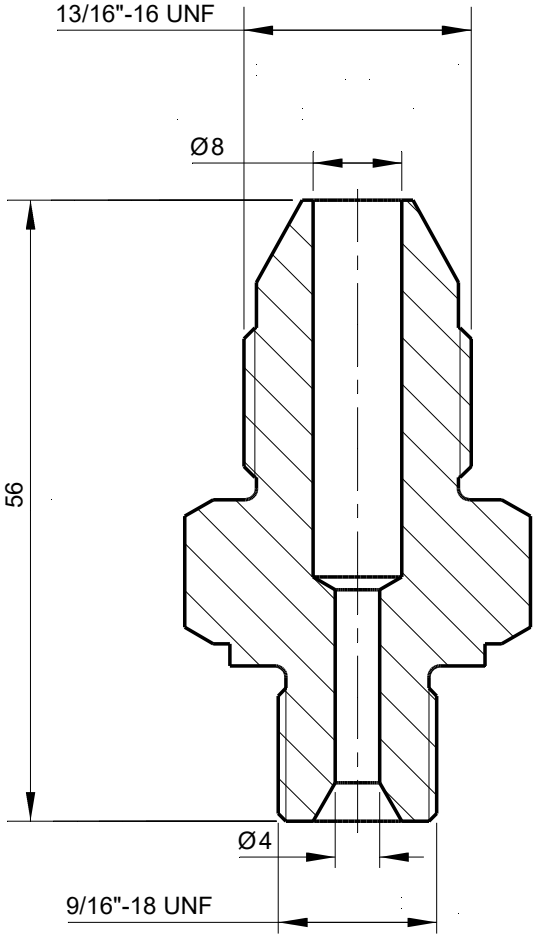

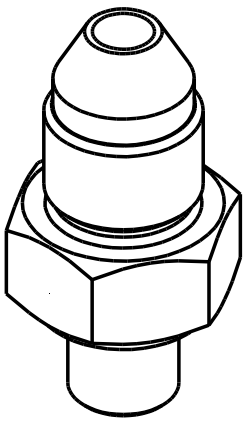

Section B-B

Tolerances Unless Otherwise Specified ACC. DIN-ISO 2768 -1and 2 Angular +/- 0,3° Corners <0,2x45° / R<0,2	**Finish** --					
	Dimension (No Decimals)	**0 t/m 6**	**6 t/m 30**	**30 t/m 120**	**120 t/m 400**	**400 t/m 1000**
	Tolerance	0,1	0,2	0,3	0,5	0,8

Material

St.St. 316

	Name	Date	Remarks
Drawn		26-6-2026	
Checked			
Projection			

Description

Adapter 5 mm 9/16"-18 UNF - 9/16" MPM 1500 bar

Drawing remains the property of Salomon Jetting Parts B.V.

Unit: mm

Number:

Project

Salomon Jetting Parts B.V.
Reedijk 8-1
3274 KE Heinenoord
www.sjpbv.com
info@sjpbv.com
+31 (0) 88 126 1900

Size	Drawing nr.	Rev
A4	21-007-003-S	A

Scale	CAD File	Sheet
1.5 :1		1 of 1