Rev.	date	Description revision
A		

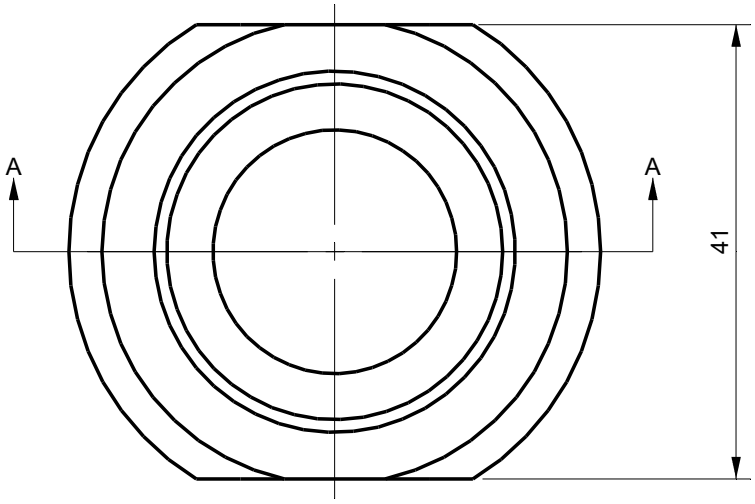

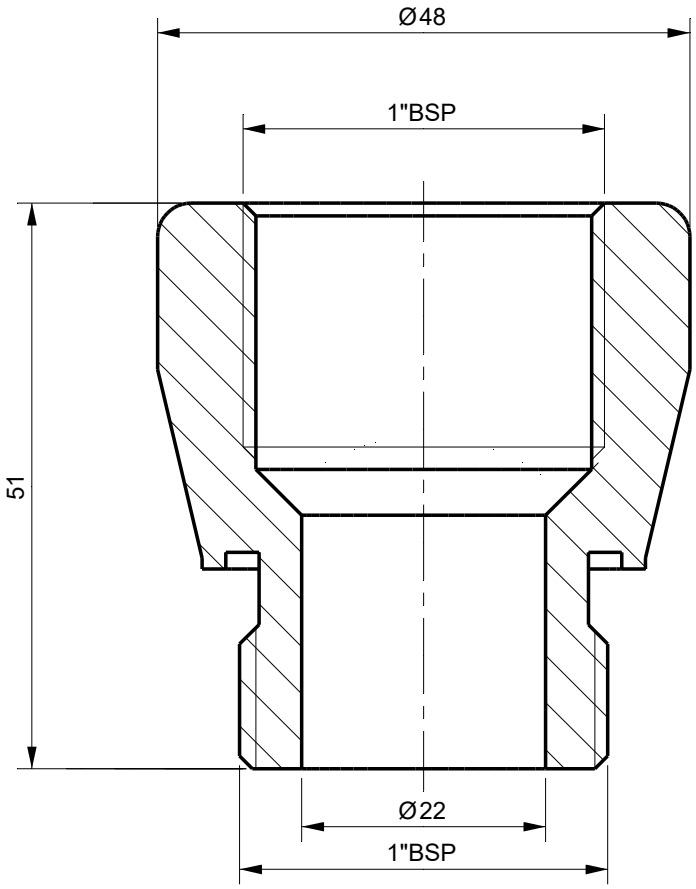

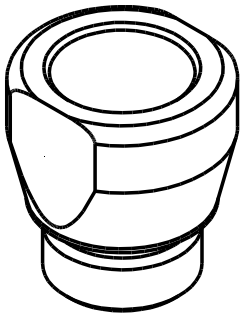

Tolerances	**Finish**					**Material**
Unless Otherwise Specified	--	Section A-A				St.St. 316
ACC. DIN-ISO 2768 -1and 2						
Angular +/- 0,3°	**Dimension (No Decimals)**	**0 t/m 6**	**6 t/m 30**	**30 t/m 120**	**120 t/m 400**	**400 t/m 1000**
Corners <0,2x45° / R<0,2	**Tolerance**	0,1	0,2	0,3	0,5	0,8

	Name	Date	Remarks
Drawn		9-10-2026	
Checked			
Projection			

Drawing remains the property of Salomon Jetting Parts B.V.

Unit: mm

Number:

Description

Extension Adapter 1"BSPM / F

Project

Salomon Jetting Parts B.V.
Reedijk 8-1
3274 KE Heinenoord
www.sjpbv.com
info@sjpbv.com
+31 (0) 88 126 1900

Size	Drawing nr.	Rev
A4	1851-S	A

Scale	CAD File	Sheet
1.5:1		1 of 1