Rev.	date	Description revision
A		

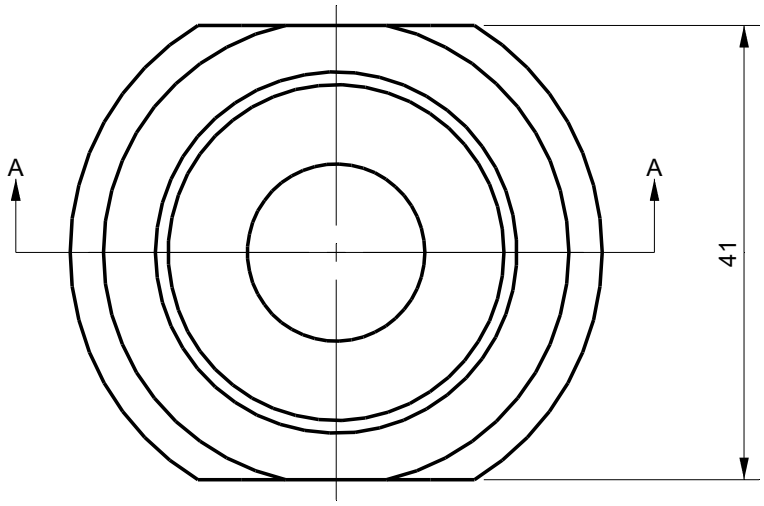

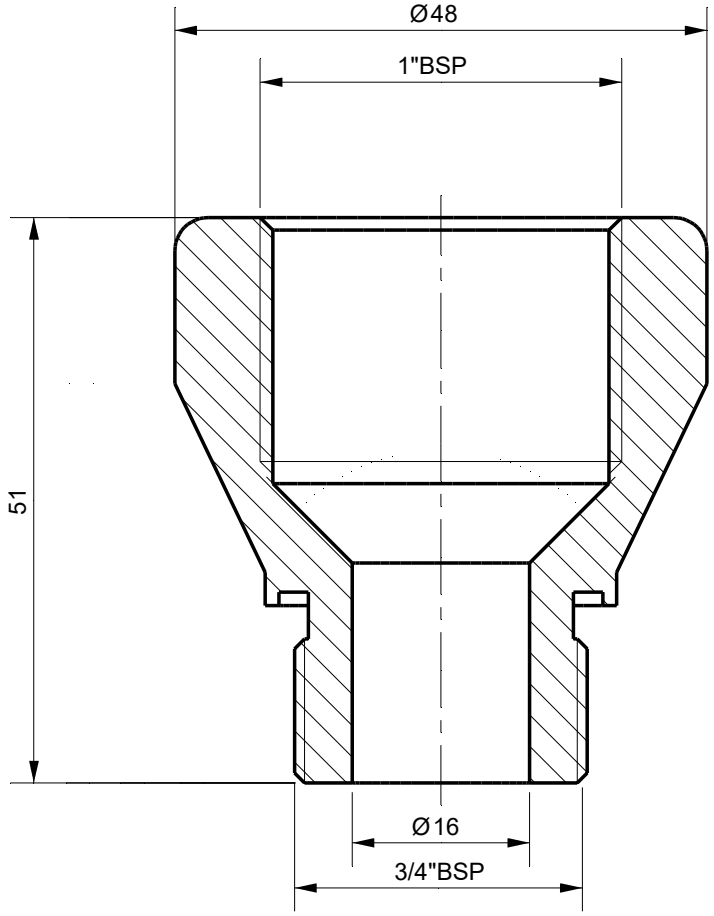

Section A-A

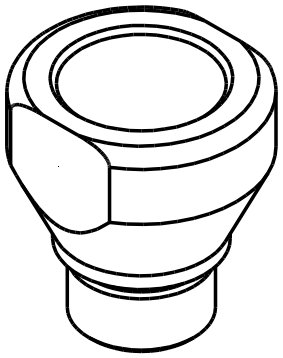

Tolerances	Finish	Material
Unless Otherwise Specified ACC. DIN-ISO 2768 -1and 2 Angular +/- 0,3° Corners <0,2x45° / R<0,2	--	St.St. 316

Dimension (No Decimals)	0 t/m 6	6 t/m 30	30 t/m 120	120 t/m 400	400 t/m 1000
Tolerance	0,1	0,2	0,3	0,5	0,8

	Name	Date	Remarks
Drawn		18-8-2026	
Checked			
Projection			

Drawing remains the property of Salomon Jetting Parts B.V.

Unit: mm

Number:

Description: Reducing Adapter 3/4"BSPM - 1"BSPF

Project:

Salomon Jetting Parts B.V.
Reedijk 8-1
3274 KE Heinenoord
www.sjpbv.com
info@sjpbv.com
+31 (0) 88 126 1900

Size	Drawing nr.	Rev
A4	2318-S	A

Scale	CAD File	Sheet
1.5:1		1 of 1