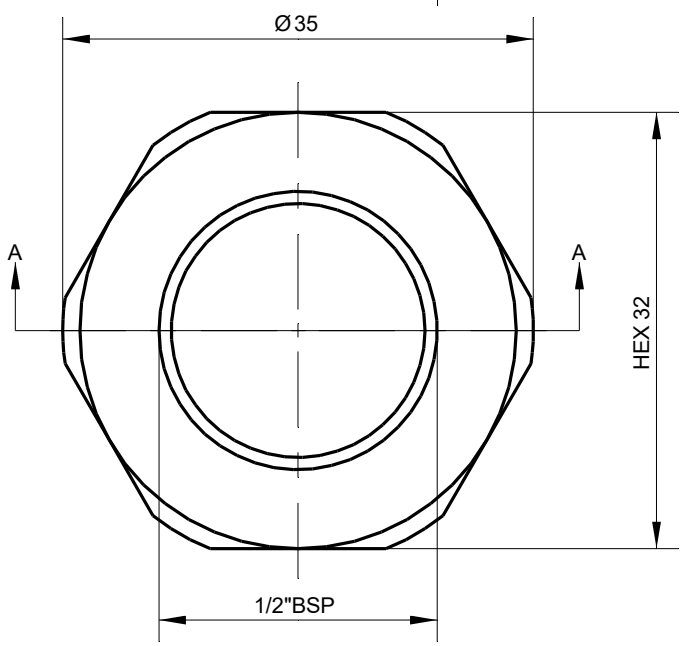

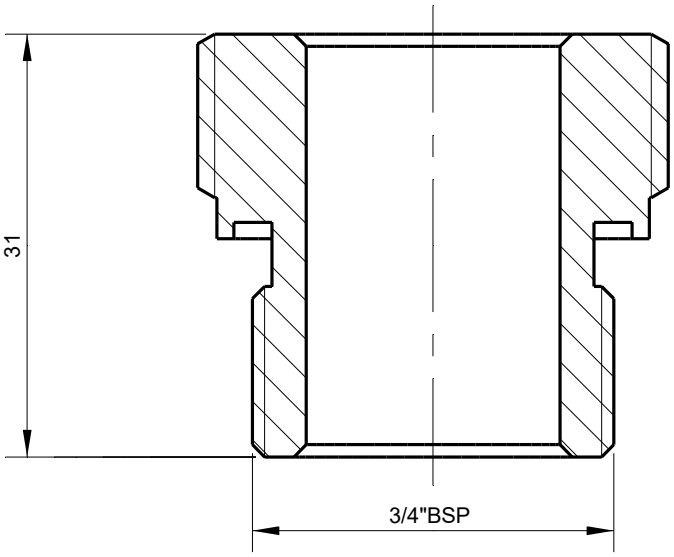

Section A-A

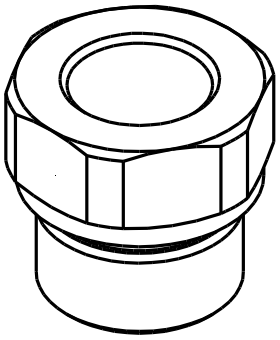

Tolerances Unless Otherwise Specified ACC. DIN-ISO 2768 -1and 2 Angular +/- 0,3° Corners <0,2x45° / R<0,2	**Finish** --					**Material** St.St. 303
	Dimension	**0 t/m 6**	**6 t/m 30**	**30 t/m 120**	**120 t/m 400**	**400 t/m 1000**
	Tolerance	**0,1**	**0,2**	**0,3**	**0,5**	**0,8**

	Name	Date	Remarks
Drawn		10-1-2020	
Checked			
Projection			

Description

Reducing Adapter 3/4"BSPM - 1/2"BSPF

Drawing remains the property of Salomon Jetting Parts B.V.

Unit: mm

Number:

Project

Salomon Jetting Parts B.V.
Industriestraat 17
3291 CC Strijen
www.sjpbv.com
info@sjpbv.com
+31 (0) 88 126 1900

Size	Drawing nr.	Rev
A4	4109-S	A
Scale 2:1	**CAD File**	**Sheet** 1 of 1