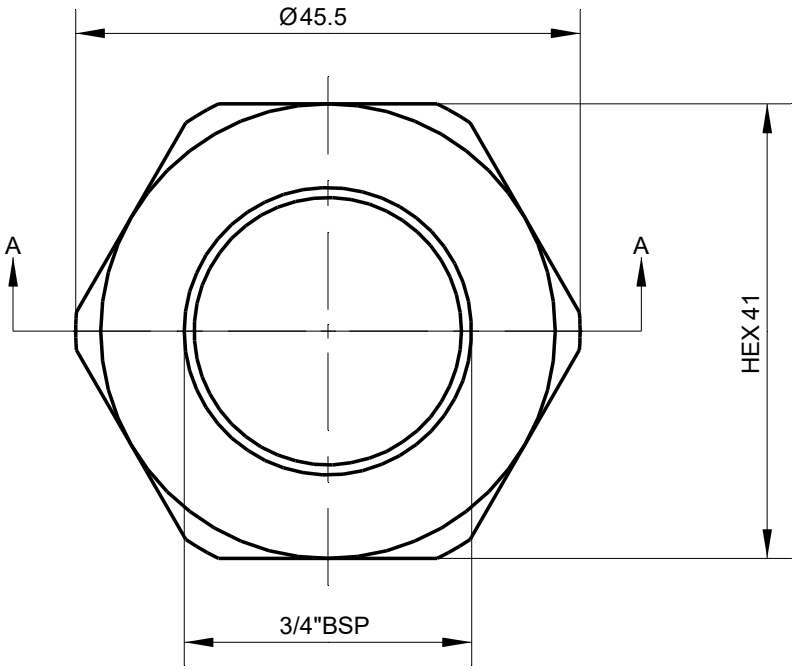

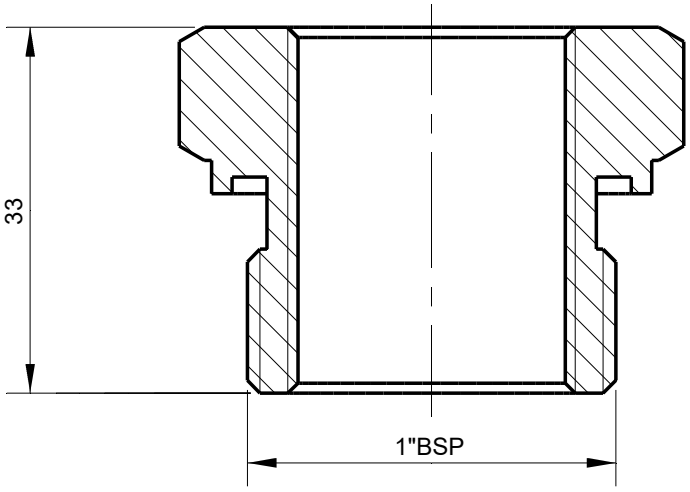

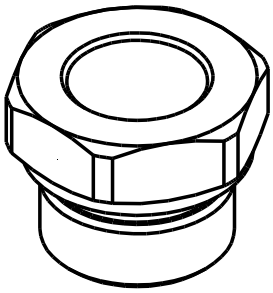

Section A-A

Tolerances Unless Otherwise Specified ACC. DIN-ISO 2768 -1and 2 Angular +/- 0,3° Corners <0,2x45° / R<0,2	**Finish** --					**Material** St.St. 303
	Dimension	0 t/m 6	6 t/m 30	30 t/m 120	120 t/m 400	400 t/m 1000
	Tolerance	0,1	0,2	0,3	0,5	0,8

	Name	Date	Remarks	Description
Drawn		13-1-2020		Reducing Adapter 1"BSPM - 3/4"BSPF
Checked				
Projection				

Drawing remains the property of Salomon Jetting Parts B.V. | Unit: mm | Number | Project

Salomon Jetting Parts B.V.
Industriestraat 17
3291 CC Strijen
www.sjpbv.com
info@sjpbv.com
+31 (0) 88 126 1900

Size	Drawing nr.	Rev
A4	4110-S	A
Scale 1:1.5	**CAD File**	**Sheet** 1 of 1