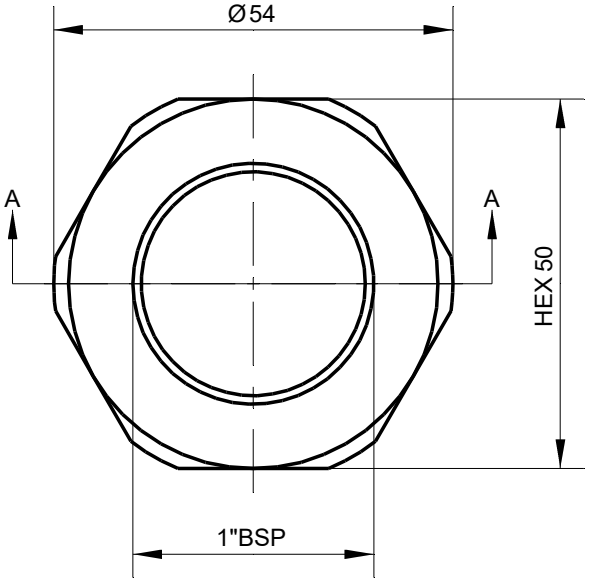

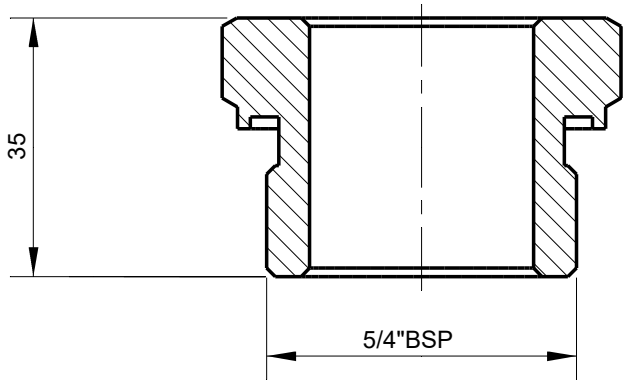

Section A-A

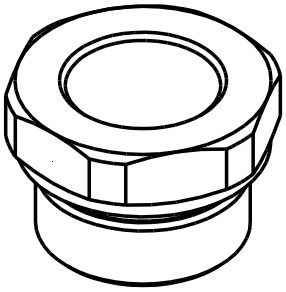

Tolerances Unless Otherwise Specified ACC. DIN-ISO 2768 -1and 2 Angular +/- 0,3° Corners <0,2x45° / R<0,2	**Finish** --					**Material** St.St. 303
	Dimension	0 t/m 6	6 t/m 30	30 t/m 120	120 t/m 400	400 t/m 1000
	Tolerance	0,1	0,2	0,3	0,5	0,8
	Name	**Date**	**Remarks**			**Description** Reducing Adapter 1 1/4"BSPM - 1"BSPF
Drawn		13-1-2020				
Checked						
Projection		**Drawing remains the property of Salomon Jetting Parts B.V.**	**Unit** mm	**Number**		Project

Salomon Jetting Parts B.V.
Reedijk 8-1
3274 KE Heinenoord
www.sjpbv.com
info@sjpbv.com
+31 (0) 88 126 1900

Size	Drawing nr.	Rev
A4	4114-S	A
Scale 1:1	**CAD File**	**Sheet** 1 of 1