SERIES TK

Hydrokinetic self-rotating heads
for cleaning containers and surfaces





TK1 A

20÷60 l/min

360° volumetric cleaning

Nozzles: 2 - 4 | 10÷250 bar | 20÷30 rpm



TK1 B

50÷200 l/min

360° volumetric cleaning

Nozzles: 2 - 4 | 10÷250 bar | 20÷30 rpm



TK2

20÷60 l/min

240° sectorial volumetric cleaning

Nozzles: 2 - 3 - 4 | 10÷250 bar | 90÷110 rpm



TK3

Ø 60mm | 10÷30 l/min

360° volumetric cleaning

Nozzles: 2 - 4 | 10÷250 bar | 25÷35 rpm



TK4

20÷60 l/min

FRONTAL cleaning 20°÷120°

Nozzles: 2 - 4 | 10÷250 bar | 90÷110 rpm

MAINTENANCE SIMPLE AND INTUITIVE

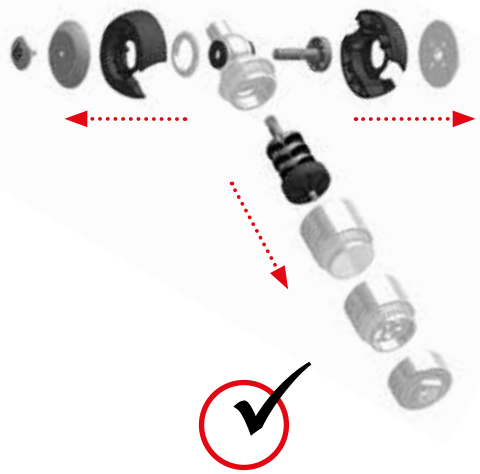

- Fast diagnostics and repairs.
- Easy disassembly and part replacement.
- Spare parts kits for enhanced durability.
- Multilingual manuals.

FEATURES

- Heads **calibrated** for specific flow rates and pressures.
- **High washing efficiency (95%),** ensured by **minimal pressure drop.**
- **Number and type of nozzles** can be configured **based on flow/pressure** and application type.
- **Compatible nozzles:** straight and fan-shaped.
- **Universal Compatibility.**
- **Installation:** heads can operate in any position.
- **Detergent use:** heads are compatible with cleaning agents, including the most aggressive ones.
- The heads are supplied with **EPDM seals. Viton, NBR, and others are available upon request.**

ADVANTAGES

Savings and sustainability
Reduced consumption of water, chemicals and work.

Efficiency and safety
Effective and reliable cleaning.
Compact, robust, and safe design.

Customization
Custom versions available upon request.

CERTIFICATIONS

ATEX
Heads ATEX-certified for use in explosive environments.

MOCA
Heads MOCA-certified for use in food and pharmaceutical environments.

APPLICATIONS



TRANSPORTATION

Cleaning tank truck (food, chemical, cosmetics industries, etc.)

TK1 A



TK1 B





SILOS

Cleaning silos of all sizes and industries (winemaking, food, chemical, pharmaceutical, etc.)



BIN WASHER

Washing and sanitizing urban waste vehicles

TK2



TK3



IBC & SMALL CONTAINERS

Cleaning of closed containers such as IBCs, with small access openings (for food, chemical, agricultural, industrial use, etc.)





CAR-WASH

Portals for high-pressure, no-touch vehicle washing. Surface cleaning for conveyor belts.

TK4



TK1 A

SELF SPINNING HEADS

20÷60 l/min

360° volumetric cleaning



TK1 B

SELF SPINNING HEADS

50÷200 l/min

360° volumetric cleaning



TYPE	OPERATING FLOW RATE l/min	OPERATING FLOW RATE USGpm	COMPLETE CYCLE Rotations	COMPLETE CYCLE TIME	INLET	WEIGHT kg	WEIGHT oz
TK1 A	20 MIN 60 MAX	5.3 MIN 15.85 MAX	60	2' 30"	G 1" F or NPT 1" F	8,1	285,7
TK1 B	50 MIN 200 MAX	13,2 MIN 52,8 MAX	60	2' 30"	G 1" F or NPT 1" F	8,1	285,7

Fill out the form to define the technical specifications of the product

OPERATING PRESSURE	10 bar	MIN	1 MPa		145 psi	MIN
	250 bar	MAX	25 MPa		3630 psi	MAX
TEMPERATURE	0 °C	MIN	32 °F	MIN		
	90 °C	MAX	194 °F	MAX		
NUMBER OF ROTATIONS	20 rpm	MIN				
	30 rpm	MAX				
NOZZLE CONNECTION	1/4" NPT					
MATERIAL	AISI 316 Stainless Steel-PEEK Plastic					
SEAL MATERIAL	EPDM					

Made in Italy

ON REQUEST, O-RING IN VITON® OR NBR



SUPPLIED COMPLETE WITH INLET FILTER 32 MESH (600 MICRON)

DIMENSIONS

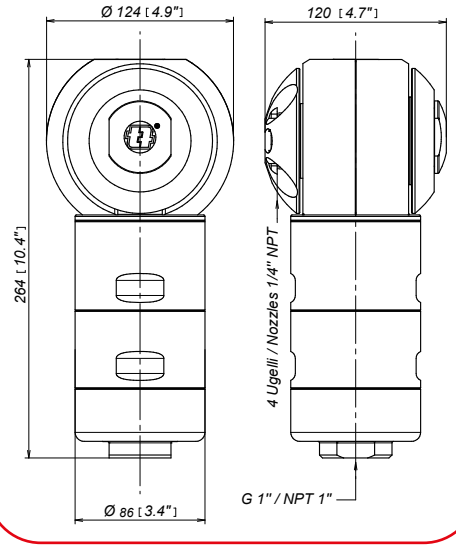

NUMBER OF NOZZLES

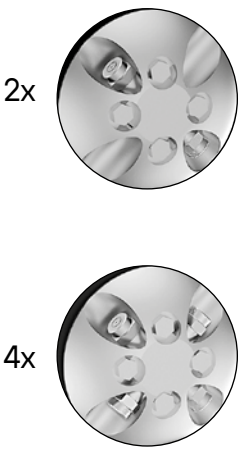



TK2

SELF SPINNING HEADS

20÷60 l/min

240° sectorial volumetric cleaning

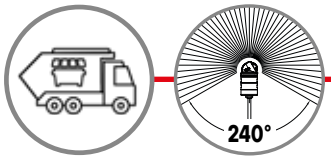



TYPE	OPERATING FLOW RATE l/min	OPERATING FLOW RATE USGpm	COMPLETE CYCLE Rotations	COMPLETE CYCLE TIME	INLET	WEIGHT kg	WEIGHT oz
TK2	20 MIN 60 MAX	5.3 MIN 15.85 MAX	30	18"	G 1/2" F or NPT 1/2" F	6,2	219,0

Fill out the form to define the technical specifications of the product

OPERATING PRESSURE	10 bar	MIN	1 MPa		145 psi	MIN
	250 bar	MAX	25 MPa		3630 psi	MAX
TEMPERATURE	0 °C	MIN	32 °F	MIN		
	90 °C	MAX	194 °F	MAX		
NUMBER OF ROTATIONS	90 rpm	MIN				
	110 rpm	MAX				
NOZZLE CONNECTION	1/8" NPT					
MATERIAL	AISI 316 Stainless Steel-PEEK Plastic					
SEAL MATERIAL	EPDM					

Made in Italy

ON REQUEST, O-RING IN VITON® OR NBR



SUPPLIED COMPLETE WITH INLET FILTER 32 MESH (600 MICRON)

DIMENSIONS

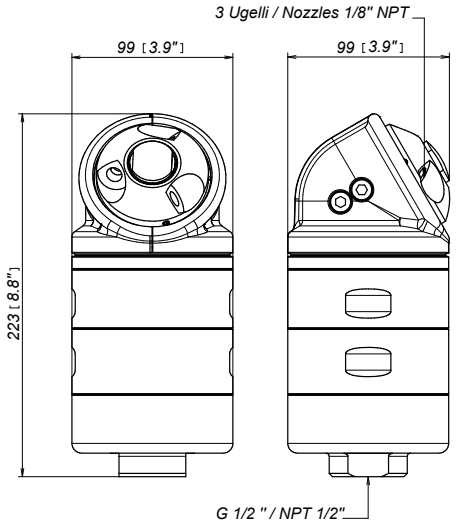

NUMBER OF NOZZLES

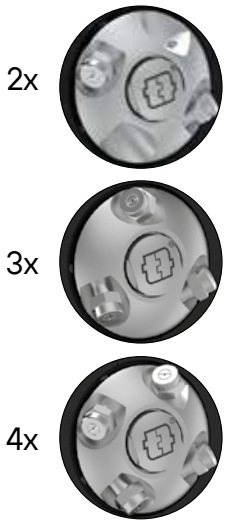

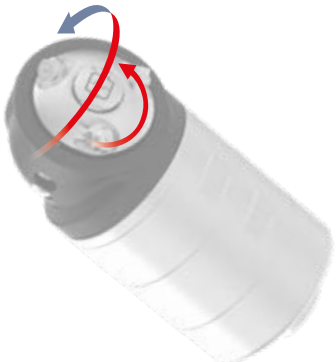

TK3

SELF SPINNING HEADS

10÷30 l/min

360° volumetric cleaning

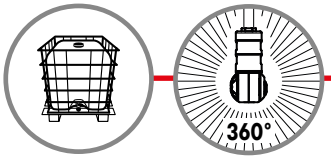



TYPE	OPERATING FLOW RATE l/min	OPERATING FLOW RATE USGpm	COMPLETE CYCLE Rotations	COMPLETE CYCLE TIME	INLET	WEIGHT kg	WEIGHT oz
TK3	10 MIN 30 MAX	2.64 MIN 7.92 MAX	40	1' 36"	G 1/2 F or NPT 1/2" F	2,4	82,9

Fill out the form to define the technical specifications of the product

OPERATING PRESSURE	10 bar	MIN	1 MPa		145 psi	MIN
	250 bar	MAX	25 MPa		3630 psi	MAX
TEMPERATURE	0 °C	MIN	32 °F	MIN		
	90 °C	MAX	194 °F	MAX		
NUMBER OF ROTATIONS	25 rpm	MIN				
	35 rpm	MAX				
NOZZLE CONNECTION	M4					
MATERIAL	AISI 316 Stainless Steel-PEEK Plastic					
SEAL MATERIAL	EPDM					

Made in Italy

ON REQUEST, O-RING IN VITON® OR NBR



SUPPLIED COMPLETE WITH INLET FILTER 32 MESH (600 MICRON)

DIMENSIONS

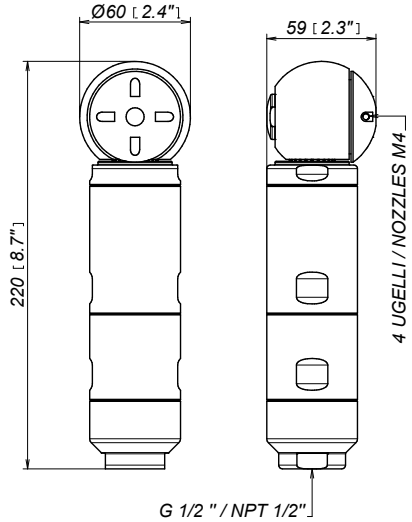

NUMBER OF NOZZLES

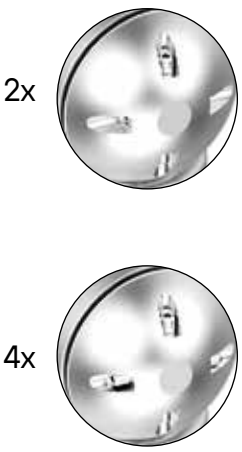



TK4

SELF SPINNING HEADS

20÷60 l/min

Frontal cleaning

20°÷120°

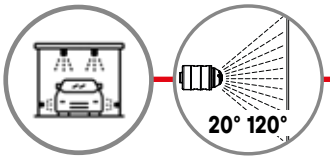



TYPE	OPERATING FLOW RATE		INLET	WEIGHT	
	l/min	USGpm		kg	oz
TK4	20 MIN 60 MAX	5.3 MIN 15.85 MAX	G 1/2 F or NPT 1/2" F	5,7	201,1

Fill out the form to define the technical specifications of the product

OPERATING PRESSURE	10 bar	MIN	1 MPa		145 psi	MIN
	250 bar	MAX	25 MPa		3630 psi	MAX
TEMPERATURE	0 °C	MIN	32 °F	MIN		
	90 °C	MAX	194 °F	MAX		
NUMBER OF ROTATIONS	90 rpm	MIN				
	110 rpm	MAX				
NOZZLE CONNECTION	1/8" NPT					
MATERIAL	AISI 316 Stainless Steel-PEEK Plastic					
SEAL MATERIAL	EPDM					

Made in Italy

ON REQUEST, O-RING IN VITON® OR NBR



SUPPLIED COMPLETE WITH INLET FILTER 32 MESH (600 MICRON)

DIMENSIONS

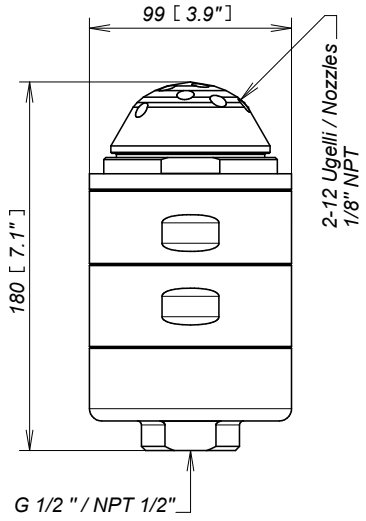

SPRAY ANGLE

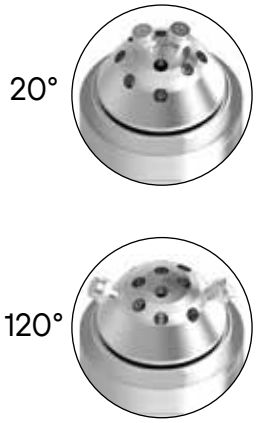

n° nozzles: min 2 - max 4

