Rev.A	date	Description revision

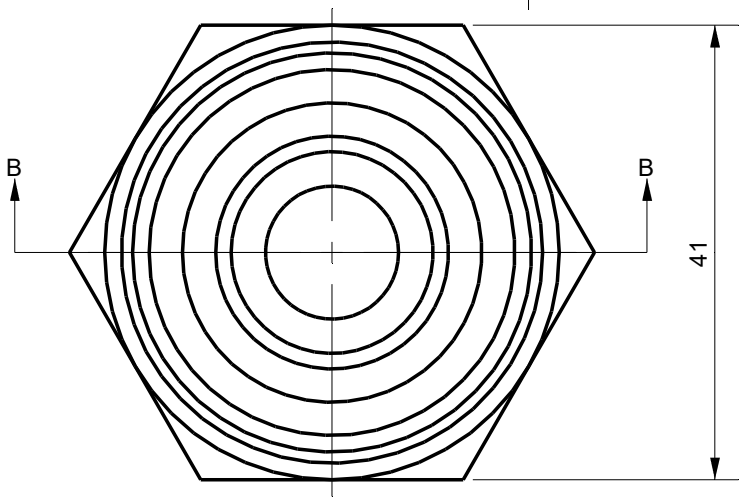

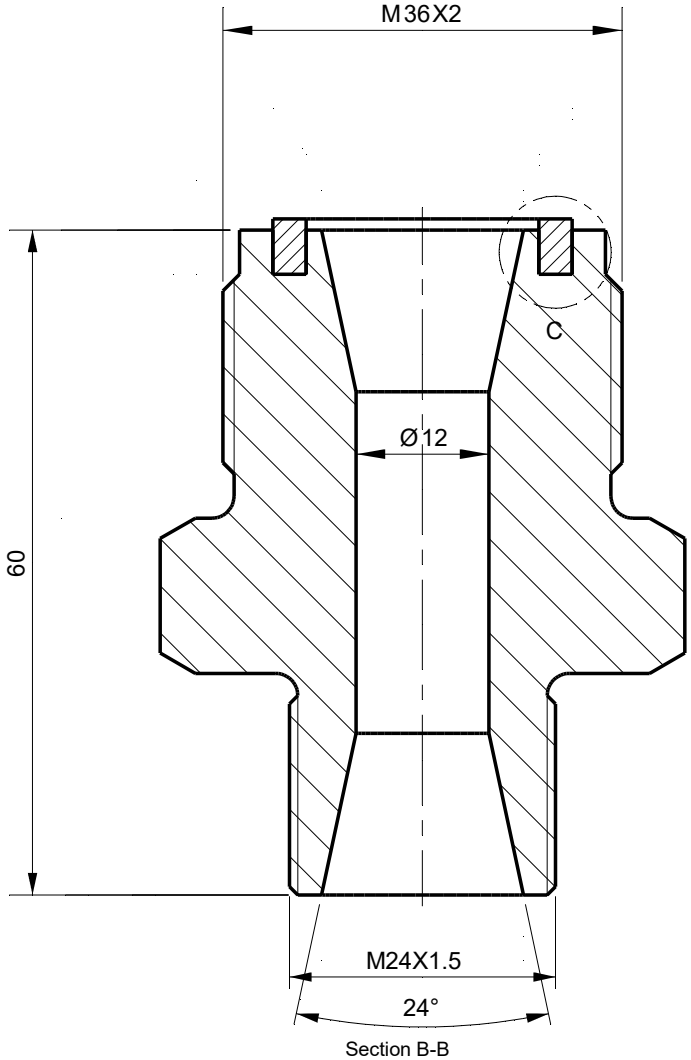

Section B-B

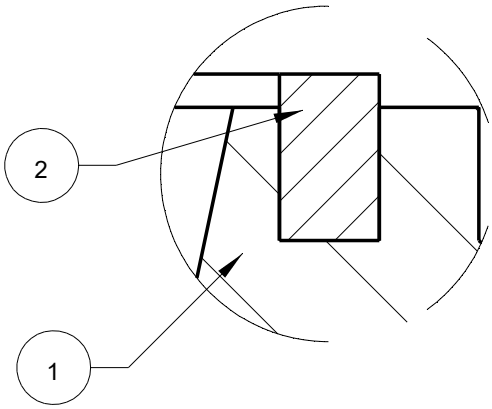

Detail C

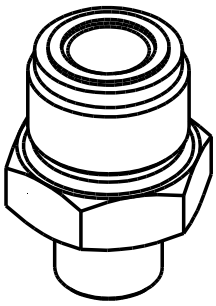

2	1	Nylon Seal M36 Flat Sealing size: Ø27/Ø21 X	Nylon-6/6		Part. Nr. 195-069.1
1	1	Adapter M24X1.5M M36X2M 1500 bar	St. St. 316	Hex 41	Part. Nr. 195-064

Tolerances
Unless Otherwise Specified
ACC. DIN-ISO 2768 -1and 2
Angular +/- 0,3°
Corners <0,2x45° / R<0,2

Finish
--

Dimension (No Decimals)	0 t/m 6	6 t/m 30	30 t/m 120	120 t/m 400	400 t/m 1000
Tolerance	0,1	0,2	0,3	0,5	0,8

Material
St.St. 316

	Name	Date
Drawn		9-11-2026
Checked		
Projection		

Remarks

Description
Adapter M24X1.5M - M36X2M flat + Seal 1500 bar

Drawing remains the property of Salomon Jetting Parts B.V.

Unit: mm

Number

Project

Salomon Jetting Parts B.V.
Reedijk 8-1
3274 KE Heinenoord
www.sjpbv.com
info@sjpbv.com
+31 (0) 88 126 1900

Size	Drawing nr.	Rev
A4	195-064	A

Scale	CAD File	Sheet
1.5:1		1 of 1

+.1
-0