Rev.A	date	Description revision

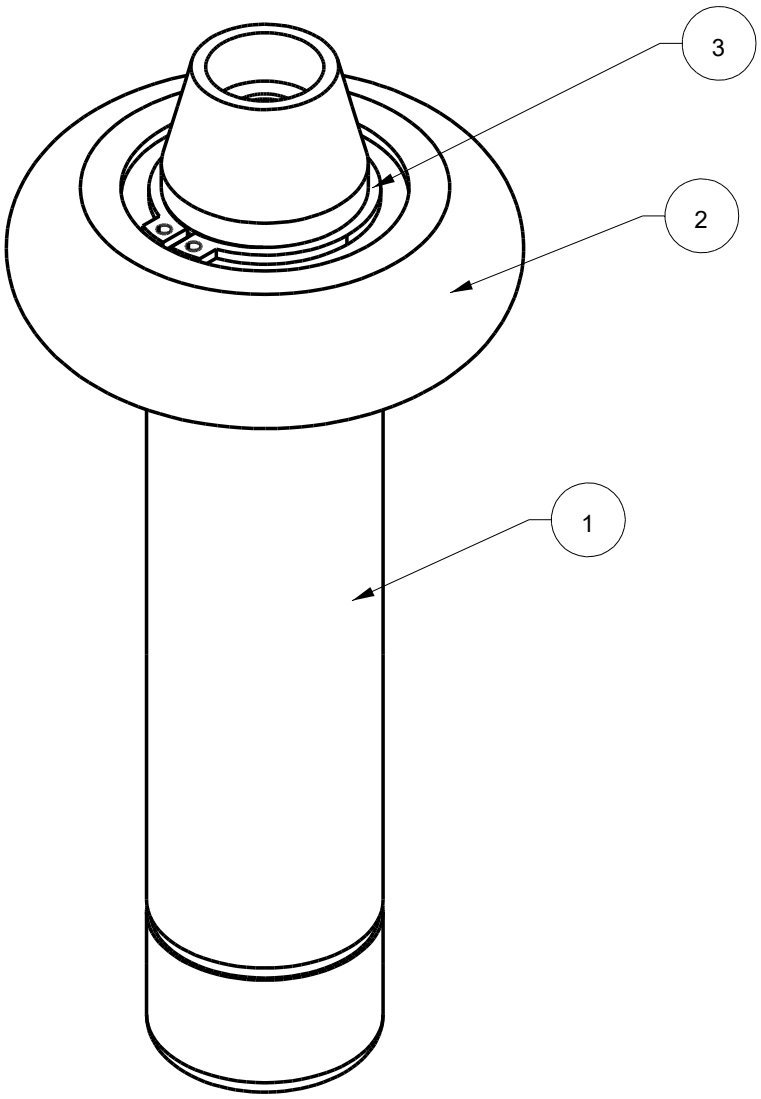

3	1	Circlip	St.St. 304		PartNr. 51435.028.001
2	1	Ring	POM		PartNr. 304091.2
1	1	Nozzle Holder 1/2" BSPF - 3/8"BSPF	St.St. 304		PartNr. 304091.5

Tolerances
Unless Otherwise Specified
ACC. DIN-ISO 2768 -1and 2
Angular +/- 0,3°
Corners <0,2x45° / R<0,2

Finish
--

Dimension (No Decimals)	0 t/m 6	6 t/m 30	30 t/m 120	120 t/m 400	400 t/m 1000
Tolerance	0,1	0,2	0,3	0,5	0,8

Material
--

	Name	Date
Drawn		16-11-2026
Checked		
Projection		

Remarks

Description
Hand Held Holder
Nozzle 3/8"BSPF - 1/2"BSPF

Project

Drawing remains the property of Salomon Jetting Parts B.V.

Unit: mm

Number

Salomon Jetting Parts B.V.
Reedijk 8-1
3274 KE Heinenoord
www.sjpbv.com
info@sjpbv.com
+31 (0) 88 126 1900

Size	Drawing nr.	Rev
A4	304091.38	A

Scale	CAD File	Sheet
1:1		1 of 1